Display & Programming.

Mode	Function	Parameter	▼	▲	Display	Default
kW [%]	kW % read out		Min.Peak*	Max. Peak*	kW[%]	
kW	kW read out		Min.Peak	Max. Peak	kW	
Pmax	Zoom max [kW]				Zoom max [kW]	
Pmin	Zoom min [kW]				Zoom min [kW]	
Display	Read out	kW% / kW	Toggle	Toggle	DsP	kW%
Ext. CT	External CT	30 - 1000 Amp	Decrease	Increase	Off, 30 - 999	Off
Int. CT	Internal current range	1, 3, 5, 8 Amp	Decrease	Increase	1, 3, 5, 8	5 Amp.
↓P[%]	Zoom max	40 - 100 %	Decrease	Increase	40 - 100	100 %
↑P[%]	Zoom min	0 - 60 %	Decrease	Increase	0 - 60	0 %
Iout	Analogue output	0-20, 4-20mA	Toggle	Toggle	Ana	4-20mA

HPL403 is programmed by the use of only three keys located on the front panel, see the paragraph about programming on page 2. All parameters as well as their range are listed in the table above. The parameters are stored in EEPROM. When no key has been activated for about 5 seconds, the display returns to the kW [%] or the kW position - depending on the chosen read out.

Note: The unit is equiped with accellerator on the keys, so the function of the keys is repeated if the keys are held down continously.

* Peak values are always displayed in kW regardless of the zoom settings.

Note! An external CT must always be mounted in the L3-phase for correct measurement. The converter polarity is not important.

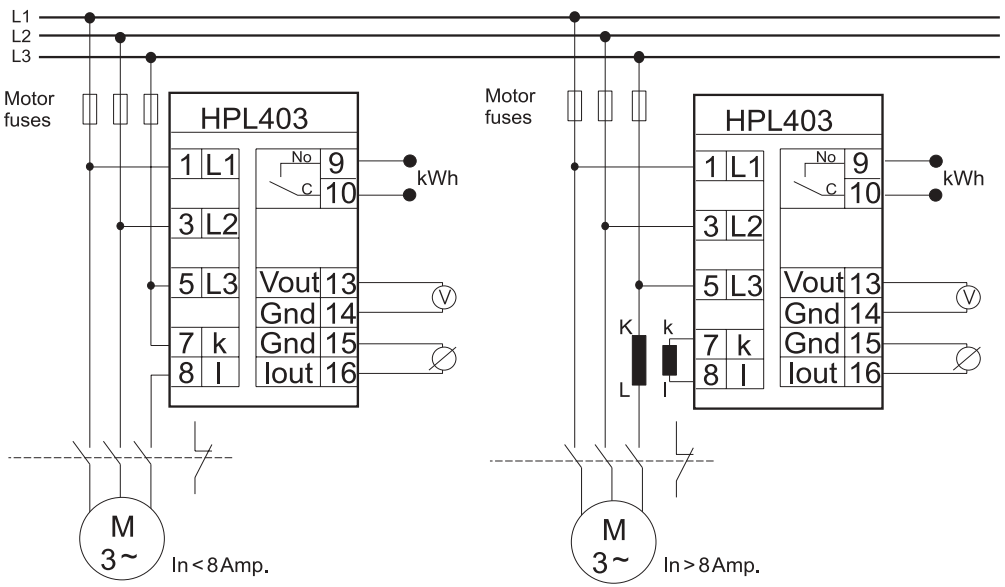

Example Internal CT

Example external N/1 or N/5 CT

Unipower

HPL403
Version 4.0

Technical information — English edition

Technical Specifications

Mechnical

Housing
Makrolon 8020 (30% GV), UL94V-1 (housing). Makrolon 2800, UL94V-2 (connector + front).

Mounting
Snap-on construction for 35mm DIN-rail or wall mounting.

Protection class
IP40 (housing).
IP20 (connector).

Temperature range: -15 - +50 °C.
Weight: Ca. 450g.
Dimensions: D 110 x W 56 x H 75 mm.

Electrical

Supply/Measurement range
See technical info on the unit.
Also available:
3 x 120 VAC -> 3 x 575 VAC

Current range
Internal max, 8 Amp.
External: N/1 or N/5 CT up to 1000A

Cos(φ) range: 0-1
Frequency range: 50 / 60 Hz.
Consumption: 2 VA

Analogue output.
(0)4-20mA, 0-400 Ohm.
(0)2-10V, load > 1 kOhm
Both outputs are galvanically isolated from the measuring system.

kWh output: 1kWh or 10kWh / pulse
Relay: 24VDC, 0.1A G.P.

CE-mark to:
EN50081-1, EN50082-2, EN61010-1

UL certified:
UL 508 - Industrial Control Equipment

WENtechnology
Raleigh, NC, USA
(919) 954-1004 ***www.wentec.com***

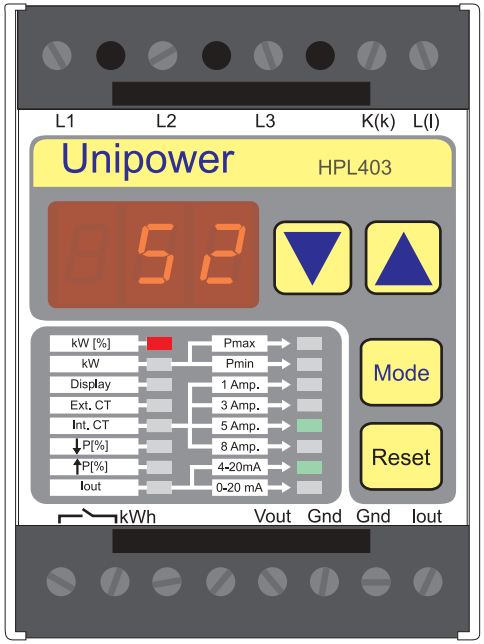

The CONCEPT

Unipower HPL403 is a member of a family of ***„Intelligent Powercontrol Units“***. The unit measures symmetrical 3-phased power in kW from the formula:

$$P = \sqrt{3} \times U \times I \times \cos\varphi$$

The unit is a dedicated measurement transducer for PLC-interface etc. It displays power in kW or kW% of the measurement range, which is set up via 4 internal current ranges (up to 8A) or via an internal table of external CTs (N/1 or N/5). The unit has user defined 0-20mA (0-10V) or 4-20mA (2-10V) as well as a kWh output with 1kWh or 10kWh pr pulse. Using the built-in zoom function the analogue output may be scaled and thereby „tuned“ to part of the measurement range.

Generally

HPL403 measures - like the rest of the HPL400-family - true power (U x I x cosφ) and may therefore also be used for measuring on non sine shaped loads, such as frequency inverters.

Programming:
HPL403 is programmed by the use of only three keys located on the front panel. The „Mode"-key is used for selecting one of the six programmable parameters: When a parameter is selected its value may be altered using the two arrow keys.

Measurement range:
Setting up the measurement range (P1max) for the HPL403 is done in two steps: Selecting external CT or internal CT and possibly setting up the zoom function. From these selections the unit calculates P1max = √3 x Unom x Inom, where Unom is the unit's nominal measurement voltage (See technical info on the unit) and Inom is the unit's nominal measurement current. Inom depends on the user settings for external and internal CT.

External CT:
HPL403 may connected to N/1 or N/5 CTs. With the item Ext. CT the connected CT is selected in the internal table (30 - 1000A). First part of the list is N/1 CTs followed by N/5 CTs. If no external CT is used, „OFF" is selected (Default). Changing external or internal CT settings results in resetting of zoom settings to default (0%, 100%).

Internal CT:
Int. CT setting (internal current range) is only available if no external CT is chosen. I.e. if no external CT is connected to HPL403, the current range is selected by setting Int. CT to 1, 3, 5 or 8A.

Zoom-function:
HPL403 contains a zoom function, which makes it possible to scale the analogue outputs (Iout and Vout) See the figure below. The scaling is done with the items P[%] in percent of the chosen measurement range (P1max). The settings for the two zoom parameters are illustrated in the table on page 4 - the narrowed range cannot be less than 40%, i.e. the difference between the upper and lower zoom limit is at least 40%.

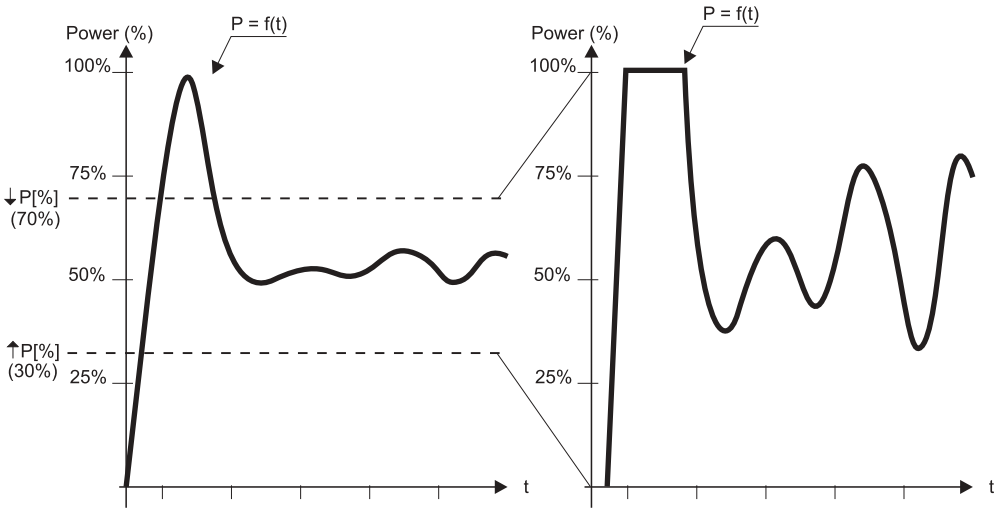

The figure on page 2 shows an example of the use of the zoom function; The left curve shows a power curve in the whole measurement range (P1max). This range is then reduced by changing the upper zoom limit to 70% and the lower zoom limit to 30%. Maximum zoom is hereby utilized, namely 40%. Read out of the unit is illustrated on the right curve, from which it is evident that the power changes produce a larger oscillation. The unit now shows 0%, when the power is less than the lower zoom limit and 100% when the power exceeds the upper zoom limit.

The corresponding kW values of the upper and lower zoom limits are displayed under **Pmax** and **Pmin**:

Peak detectors:
Leave the motor running at normal load and read the peak values by activating the arrow keys in kW[%]-mode or kW-mode. The values of the peak detectors are always displayed in kW regardless of the zoom settings.
The peak detectors may be reset seperately by pressing the relevant arrow key and at the same time activate the Reset key. Hereby the peak detector is set to the actual measurement value.

Analogue output:
HPL403 has two analogue outputs - a current- and a voltage output. The user may set the unit to 0-20mA or 4-20mA. The voltage output follows this setting, i.e. 0-20mA gives 0-10V and 4-20mA gives 2-10V.
The analogue outputs are always proportional to the units read out i kW% and thereby the scaled values if the zoom function is used.

kWh output:
Pin 9-10 on the unit is a relay output for kWh (see figure on page 4). With SW4 (see to the right) the output is set for 1 pulse pr. kWh or 1 pulse pr. 10kWh. The duration of each pulse is 200ms. The relay is on when a pulse is given.

DIP switch:
The DIP switch is found immediately below the front plate (see the figure below).

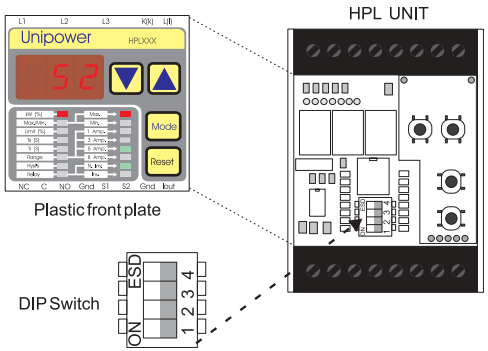

1. Turn off the unit.
2. Remove the plastic front plate (use a small screwdriver).
3. Make the changes and reassemble the unit.

SW1-Programming disabled: The Parameters may be read but not altered, when SW1 is On.
SW2: Not used.
SW3: Not used.
SW4-kWh pulse: If SW4 is OFF the unit gives 1 pulse/kWh. If ON 1 pulse/10kWh

DIP Switch Usage		
SW 1	Programm. protected	ON
SW 2	Not used	OFF
SW 3	Not used	OFF
SW 4	1 kWh / pulse	OFF
SW 4	10kWh / pulse	ON

Read out:
When „Display" is selected the standard read out is set; kW or kW%. The unit now shows this value until the display setting is changed. This setting does not influence the zoom settings.